ZEUS

Soil Moisture Retention System
User Manual

TOM GONCIN

2004 12666

March 6th, 2025

Table of Contents

1.0 System Purpose ***1***
1.1 Tasks Performed 1
1.2 Issues Addressed 1
2.0 Inputs & Outputs ***2***
3.0 Configured Hardware ***2***
3.1 STM32F103RB 2
3.2 Soil Moisture Sensor 3
3.3 Cubic, Single-pole (10A) Power Relay 3
3.4 I2C LCD Display 3
3.5 Water Pump 3
4.0 Software Configuration ***4***
4.1 Main Application Logic 4
4.2 ADC Polling & Sensor Power Management 4
4.3 ISC Driver Implementation 4
4.4 GPIO & Relay Control 4
5.0 Hardware Setup ***5***
5.1 Exterior Shell 5
5.2 Water Pump Setup 5
5.3 STM32F103RB Adapter 5
5.4 Relay Module & AC Extension Cord Modification 6
6.0 Pin Mapping ***7***
7.0 Operation & Behavior ***8***
7.1 Daytime Monitoring 8
7.2 Status Update 8
7.3 Evening Window 9
8.0 Complete Finite State Machine Diagram ***10***
9.0 Risk Assessment Mitigation Strategy ***11***
10.0 Device Datasheets ***12***
11.0 Zeus Schematic ***13***

1.0 System Purpose

The purpose of this project is to design and build a microcontroller-based soil moisture monitoring and irrigation controller. It automatically decides whether evening watering is required and, if necessary, activates a water pump after sunset to protect plants from heat stress and leaf burn. This system addresses the real-world problem of inconsistent manual watering and midday irrigation damage. It continuously checks soil moisture throughout the day but only permits watering during a configurable evening window when conditions are gentler on the plants.

1.1 Tasks Performed

This system periodically samples the temperature and smoke/gas levels of its environment. After sampling, the device performs an internal calculation to determine if these levels surpass the safe allowance. If the system does detect unsafe levels of gas/smoke in the atmosphere, it triggers the output sequence. This task includes flashing LED indicators, driving a loud alarm, and displaying a warning message on the LCD display to evacuate.

1.2 Issues Addressed

you are moving from switching a low-voltage DC pump to switching 120V AC mains wall power. This requires strict safety precautions. Unlike your original design where all grounds were tied together, **you must completely isolate the AC ground and neutral from your STM32's DC ground.** The AC Hot (Live) wire is the *only* wire that should pass through the relay's COM and NO terminals.

2.0 Inputs & Outputs

Analog Input 1 — Soil Moisture Sensor	Samples the soil moisture level via ADC and converts it to a voltage representing dry or wet soil conditions.
Digital Input 1 — Real-Time Clock / Time Source	Provides current time information so the controller can distinguish daytime monitoring from the evening watering period.
Digital Input 2 — Configuration	Buttons or an encoder via GPIO that allows the user to set moisture thresholds and configure the evening watering window or manual override modes.
Output 1 — AC Pump Relay	Driven by GPIO to switch AC mains power to a female extension cord receptacle, turning the water pump on or off during the evening window
Output 2 — I2C LCD	Displays real-time soil status, thresholds, and diagnostic text such as “No water required this evening” or “Water required this evening”.

3.0 Configured Hardware

3.1 STM32F103RB

The STM32F103RB is on a Nucleo-64 development board. It is an ARM Cortex-M3 microcontroller that will serve as the CPU for ZEUS — Automated Soil Moisture Controlled Irrigation System.
ZEUS, using the STM32F103RB will execute C firmware that will schedule watering times based on its processing of analog voltage readings from the soil sensors’ digital voltages via the STM32F103RBs’ internal Analog-to-Digital Converter (ADC). That, along with it communicating externally through the LCD over I2C for observers to read its current state if needed. Depending on the state, the STM32F103RB will have output a message on the LCD expressing the state of whether a watering window schedule window has been made. If one has been made, the STM32F103RB will toggle the relay via its General-Purpose Input/Output (GPIO) pins, which in turn will power ON/OFF a water pump at the scheduled window.

3.2 Soil Moisture Sensor

This is an analog sensor used to measure the volumetric water content of the soil. It consists of two exposed pads that act as probes: as water content increases, conductivity changes, outputting a corresponding voltage signal. An **important note:** To prevent rapid galvanic corrosion of the probes, the microcontroller only supplies power to the sensor for brief intervals when an active reading is required.

3.3 Cubic, Single-pole (10A) Power Relay

A power relay is an electromechanical switch that allows a low-voltage, low-current signal that will be used here with the STM32F103RB to safely control a high-voltage, high-current circuit. In ZEUS, it acts as a safely isolated gatekeeper spliced into the hot wire of an AC extension cord, physically closing the circuit to power the external water pump only when the microcontroller determines the soil is dry enough and that the time constraint states that it must fall within the watering window, which will be set to the evening to avoid vegetation sun burn.

3.4 I2C LCD Display

This is a standard liquid crystal display with 20x4 characters. Equipped with a PCF8574 I2C backpack. The backpack converts parallel data into I2C serial data, allowing the screen to communicate with the microcontroller using only two data lines (SDA and SCL) instead of multiple GPIO pins. This innovative design reduces the need for a multitude of ports, enriching the man-machine interaction, since often designers are limited to the quantity of pins. This display provides real-time diagnostic text and threshold statuses to the user, such as with ZEUS, indicating whether water is required for the evening.

3.5 Water Pump

The water pump used is for pumping well water out from the ground, for acreage use. It runs on a regular Canadian household wall outlet (120V AC). This requires strict safety precautions. Diverging to a more pragmatic solution, since splicing the water pumps cord and tying all grounds together would ruin the integrity of a perfectly good water pump cable. The improvised solution converges back to a more practical solution at a commercial level as well, to use a female end of an appropriate amp-rated extension cord. This way, if a pump seizes, as these things happen, it’s a quick swap. However, unlike the original design where all grounds were tied together, **the system must completely isolate the AC ground and neutral from the STM32F103RB's DC ground.** The AC Hot (Live) wire is the *only* wire that should pass through the relay's COM and NO terminals.

4.0 Software Configuration

4.1 Main Application Logic

The central control loop of the firmware, written in C. It dictates the system's overall operational state by managing timing intervals and evaluating the current time against the scheduled evening watering window. It coordinates all other modules, comparing the processed soil moisture data against user-defined dry/wet thresholds, and makes the final decision to activate or inhibit the pump relay.

4.2 ADC Polling & Sensor Power Management

This module configures the STM32's internal Analog-to-Digital Converter (ADC1) at the hardware register level. To prevent rapid galvanic corrosion of the physical sensor, the software triggers a brief HIGH signal on a dedicated GPIO pin to supply power, waits a few milliseconds for stabilization, executes the ADC conversion on the analog signal pin, and immediately pulls the power pin LOW. The raw analog voltage is then returned as a digital value for threshold comparison.

4.3 ISC Driver Implementation

This software component handles the serial communication protocol required to drive the external LCD. It involves configuring the STM32's I2C1 peripheral registers—setting the correct clock speed, timings, and control bits. It translates high-level text strings into the specific nibble-based command sequences required by the display's I2C backpack, ensuring the user interface updates seamlessly without tying up the microcontroller's processing time.

4.4 GPIO & Relay Control

A focused, modular function handling the digital output required to safely actuate the high-voltage AC relay. It translates the main application's decision to water the garden into a strict HIGH or LOW logic signal on the designated GPIO output pin. This module also enforces the maximum run-time duration for the pump to act as a software safeguard against over-watering.

5.0 Hardware Setup

There are a few key points that need to be clarified upon set up of ZEUS.

5.1 Exterior Shell

Due to safety reasons with the presence of electricity and moisture, whether that may be rainfall, condensation, evaporation, etc., the finished unit **must** be integrated into a moisture sealed container. The container used for ZEUS is a Canadian made, rugged, waterproof NANUK hard case designed for protection of gear in harsh conditions. The container purchased features a IP67 rating, making it fully waterproof and dust proof. The certification was achieved by proving upon submersion of the case in up to 1 meter of water for 30 minutes without leakage.

5.2 Water Pump Setup

Understanding the pump is partially irrelevant since the focus is brought to the extension cord that will be manufactured as a female end to be used for the pumps power supply. Since the pump is 0.5 HP, a 9-10 Amp, 1 meter in length extension cord that will be sufficient for running conditions.

5.3 STM32F103RB Adapter

Fortunately, the STM32F103RB has a voltage regulator built in. This reduces the need to purchase a transformer integrated power cord adapter. Simply plug the USB cord received with the Nucleo-64 board and use a USB to wall plug adapter.

5.4 Relay Module & AC Extension Cord Modification

Low-Voltage Side

Relay module GND connects to the breadboard DC GND

VCC connects to the 5V rail

Relay control input (IN) connects to PB8 (D6)

High-Voltage AC Side (ISOLATED)

- To avoid splicing the pump's power cable, an AC extension cord is modified. The AC Hot (Live) wire from the wall is cut and routed into the relay's COM terminal.
- The relay's NO terminal routes the AC Hot wire out to the female end of the extension cord.

CRUICIAL

The AC Neutral and AC Ground wires bypass the relay entirely, running continuously from the wall plug straight to the female extension cord end.

⚠️ SAFETY WARNING

120V AC mains voltage is lethal. The AC ground and neutral lines must NEVER be connected to the breadboard or STM32 DC ground.

All AC wiring and the relay module must be secured inside a fully insulated, waterproof, non-conductive enclosure to prevent electrocution and short circuits.

6.0 Pin Mapping

ZEUS System Pin Mapping

(STM32F103RB Nucleo-64)

Component	Module Pin	STM32 Pin	Arduino Header	Function / Notes
Soil Moisture Sensor	SIG	PA0	A0	Analog input (ADC1_IN0) to read the soil moisture voltage.
	VCC	PB0	D3	Digital output used as a "switched 3.3V" source to power the sensor only during readings.
	GND	Common GND	-	Tied to the shared system ground.
I2C LCD Backpack	SDA	PB7	D4	I2C1 Data line for display communication.
	SCL	PB6	D5	I2C1 Clock line for display communication.
	VCC	5V	-	Powered directly from the Nucleo's 5V rail.
	GND	Common GND	-	Tied to the shared system ground.
Relay Module	IN	PB8	D6	Digital output to trigger the relay ON (HIGH) or OFF (LOW).
	VCC	5V	-	Powered directly from the Nucleo's 5V rail to drive the relay coil.
	GND	Common GND	-	Tied to the shared system ground.
Power Distribution	-	5V	-	Sourced from the Nucleo USB connection to power the LCD and Relay.
	-	GND	-	

7.0 Operation & Behavior

Below are the three main operations, their states, and their behaviors. Chapter " 7.0 — Complete Finite State Machine Diagram" provides an eagles eye view of ZEUS, with all three operations together in one state diagram.

7.1 Daytime Monitoring

Periodically throughout the day the system sets pin PB0 to HIGH (Logic High = 1) to provide power to the soil sensor for roughly (10–20)ms.

Then, it reads the analog soil moisture level on pin PA0 before setting pin PB0 LOW (Logic Low = 0) to power off the sensor, reducing corrosion and power draw.

7.2 Status Update

The MCU compares the ADC reading against the calibrated (dry and wet) thresholds.

It sets an internal flag and updates the I2C LCD on pins PB6/PB7 to display either:

"No water required this evening"

"Water required this evening"

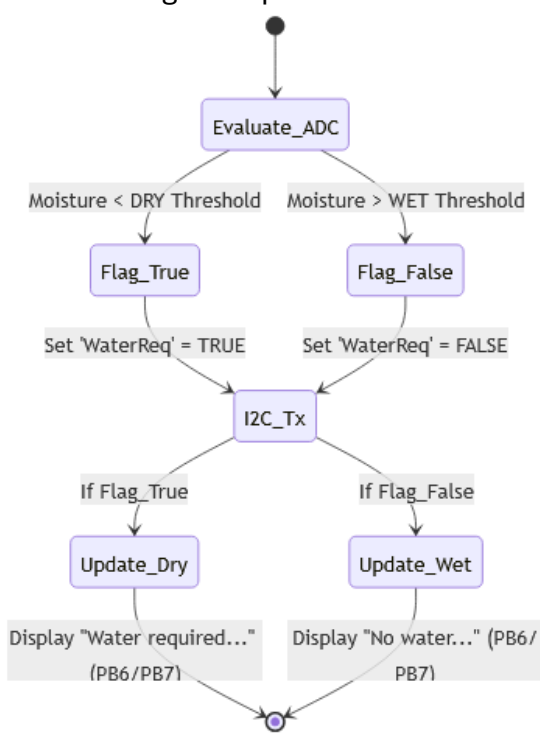

Status Update Finite State Machine

7.3 Evening Window

When the evening window triggers, the system checks the flag.

If water is required and the soil is still below the threshold, the system sets pin PB8 HIGH (Logic HIGH = 1) to activate the relay.

This closes the AC circuit on the extension cord, providing power to the plugged-in water pump for a timed duration.

Afterward, pin PB8 is set LOW (Logic LOW = 0) to stop the pump

Then the LCD is updated.

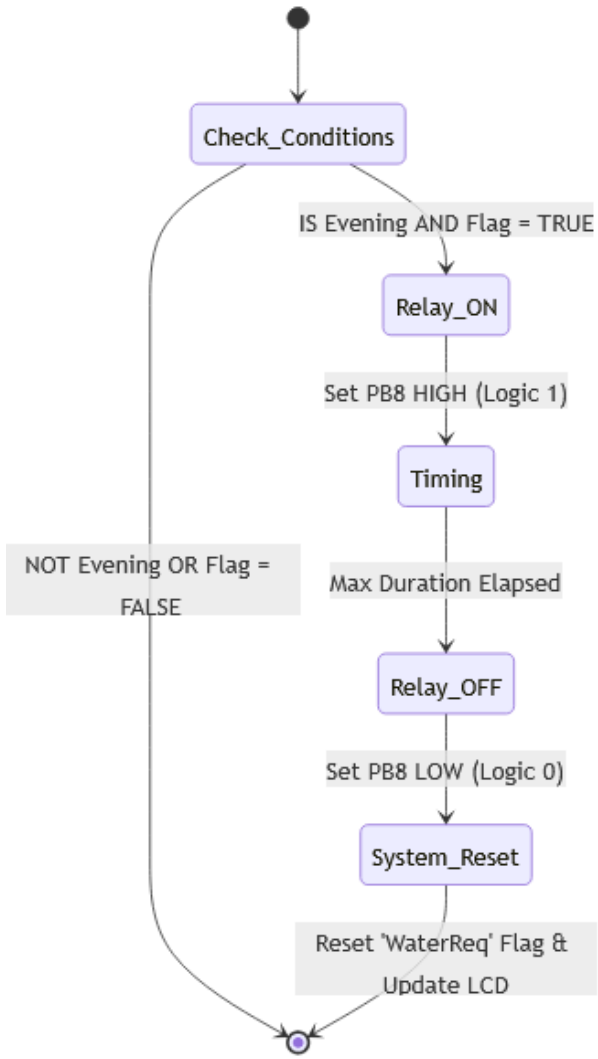

Evening Window Finite State Machine Diagram

8.0 Complete Finite State Machine Diagram

This is a representation of the full systems FSM diagram.

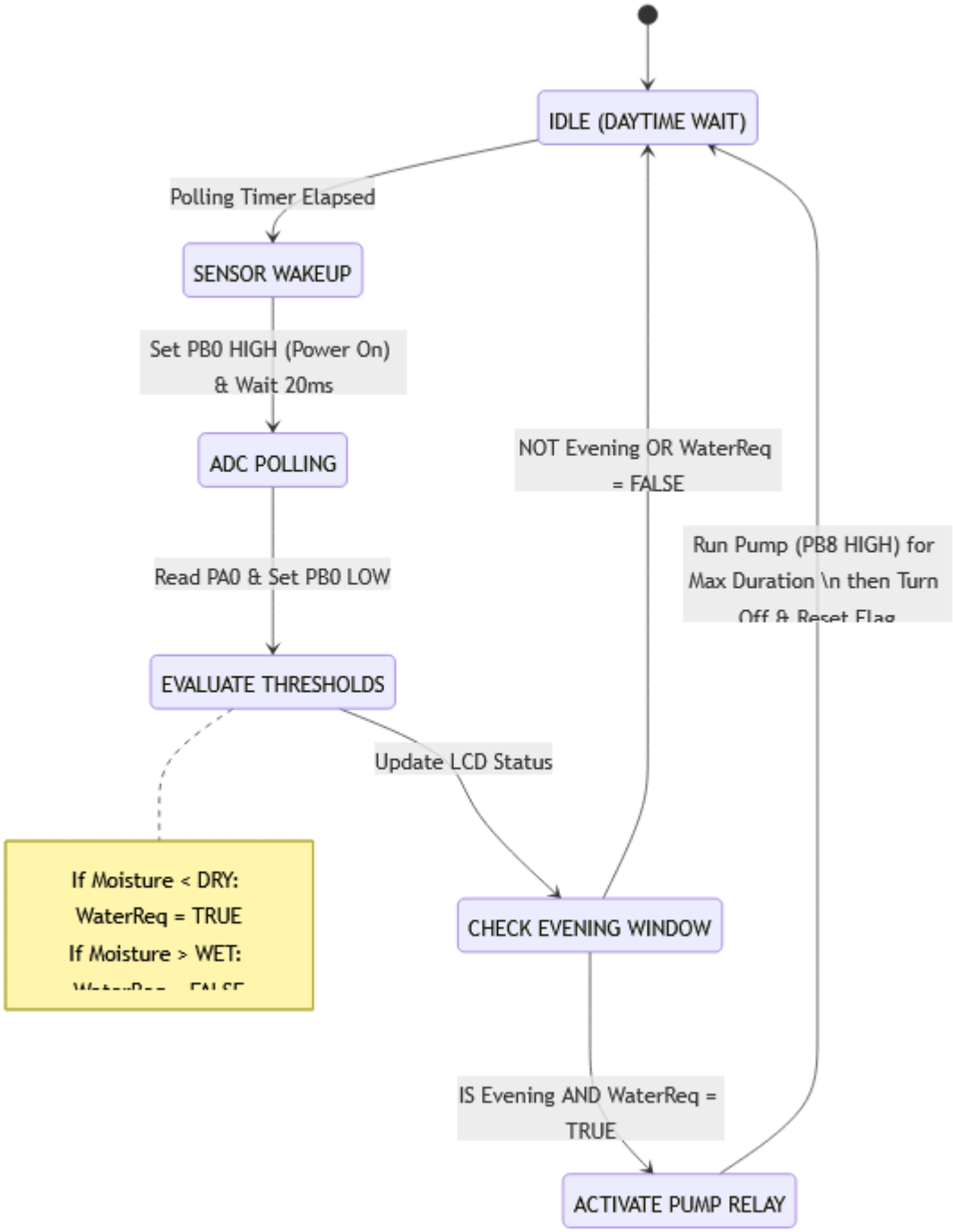

FSM Diagram of ZEUS

9.0 Risk Assessment Mitigation Strategy

Task	Hazzard	Mitigation Strategy
ZEUS Outdoor Environment Operation	• Water & Electricity Contact (Condensation, rain, moisture) • Shorting • Equipment Damage	• Weatherproof housing for completed unit, ZEUS • Stored in a military waterproofed lock box with machined holes for cables • Box mounted vertically on wall inside a pressure treated wooden box (English Gardens)
Wiring the AC Extension Cord to Relay	• Electric shock • AC Short Circuit: **120V AC IS EXTREMELY DANGEROUS** • Severe injury • Blown breakers • Electrical fire.	• All wires disconnected prior to wiring or splicing • Only route the AC Hot (Live) wire through the relay's COM and NO terminals. • Leave AC Neutral and AC Ground completely intact and continuous to the female end of extension cord (Spliced instead of splicing water pump) • Relay contacts rated for pump's maximum AC current draw
Wiring the DC Microcontroller	• Equipment Failure: Shorting DC power to GND Sending 5V into 3.3V PIN (destroying STM32 or sensors)	• **KEEP AC WIRING COMPLETELY PHYSICALLY ISOLATED FROM THE DC BREADBOARD AND STM32 GROUND.** • Triple check pinouts and schematic to powering STM32F103RB • DC Component share common GND
Daytime Soil Monitoring	Sensor Galvanic Corrosion Data sheet explicitly states that leaving power continuously supplied to the soil moisture sensor in damp soil WILL cause rapid degradation of the probes. Not meant to always run.	• Switched-power design using PB0 implemented • For ADC reading, power sensor for only [10_{ms} to 20_{ms} then pull PB0 LOW (OFF) for the rest of the interval
Evening Watering (Automated)	• Software glitch • Over-Watering • Flooding	• MAX run-time limit HARDCODED *File: main.c* *Function: Watering Loop* • Watchdog timer (IWDG) hardwired on STM32F103RB to reset MCU (Opens the relay IF software freezes)

10.0 Device Datasheets

Datasheets for all components within the system can be found with these names on the GitHub Repository linked below; located in the folder named “Data Sheets”.

GitHub Repository:

Click on Photo!

Device	File	Link
I2C LCD		
	Datasheet	*I2C - CN0296D - DATASHEET.pdf*
	Customizing Characters	*I2C - CN0296D - Related document.pdf*
	Slave Address	*I2C - Slave Address.pdf*
Soil Moisture Sensor		
	Datasheet 1	*Soil Moisture Sensor - SparkFun.pdf*
	How to hook up	*Soil Moisture Sensor Hookup Guide - SparkFun Learn.pdf*
Water Pump Relay (3V)		
	Datasheet 1	*3V Relay - STUSB4500 DS_15801 .pdf*
	Datasheet 2	*Relay Datasheet - 3V.pdf*
	How to hook up	*Qwiic Single Relay Hookup Guide - SparkFun Learn.pdf*

Table 1: Component Datasheet(s) Location

11.0 Zeus Schematic

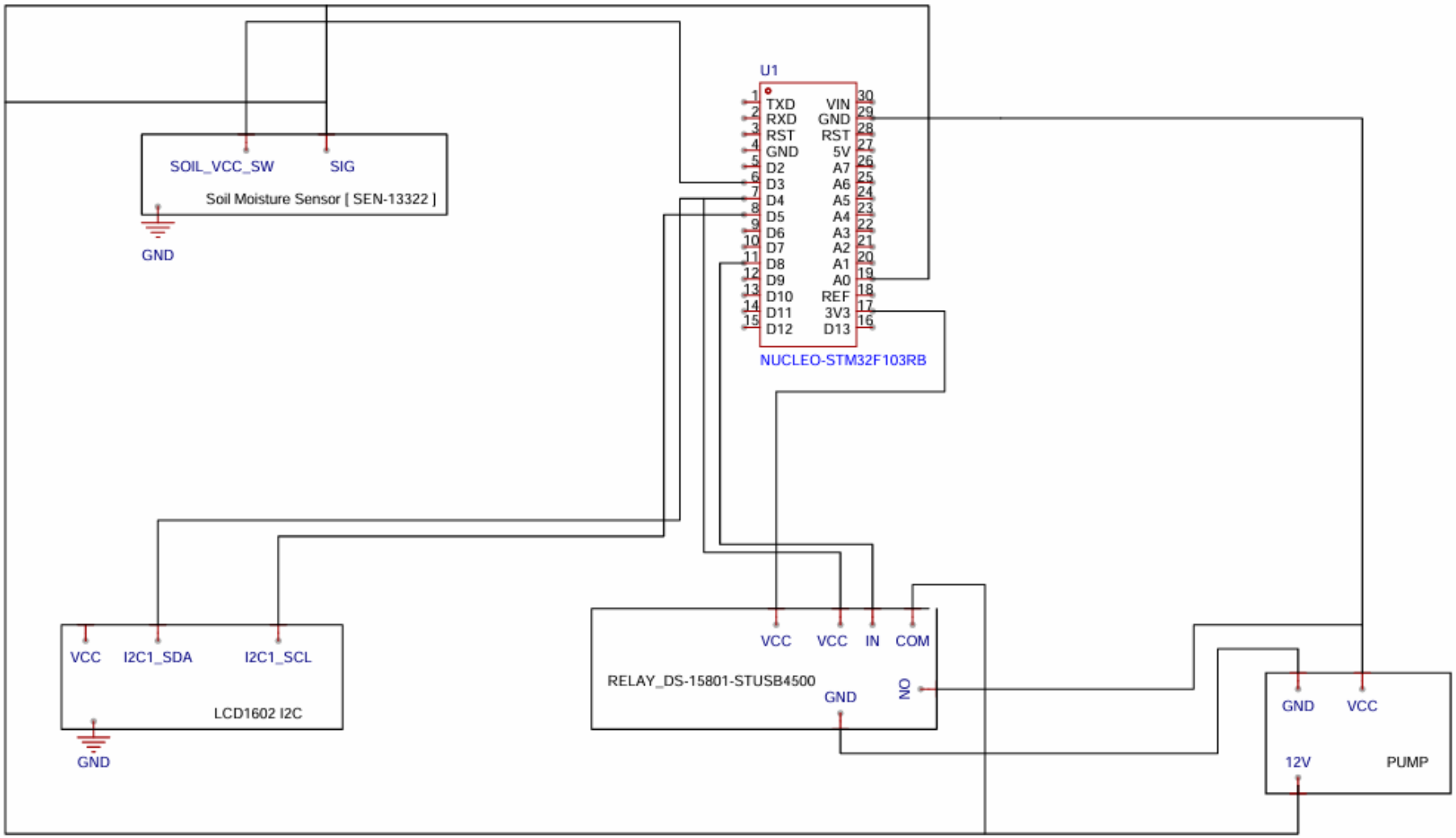

ZEUS - Moisture Measuring Watering System
Tom Goncin
ENEL 351 - Project

End of User Manual

ZEUS